MK05

COMPACT MOTORS

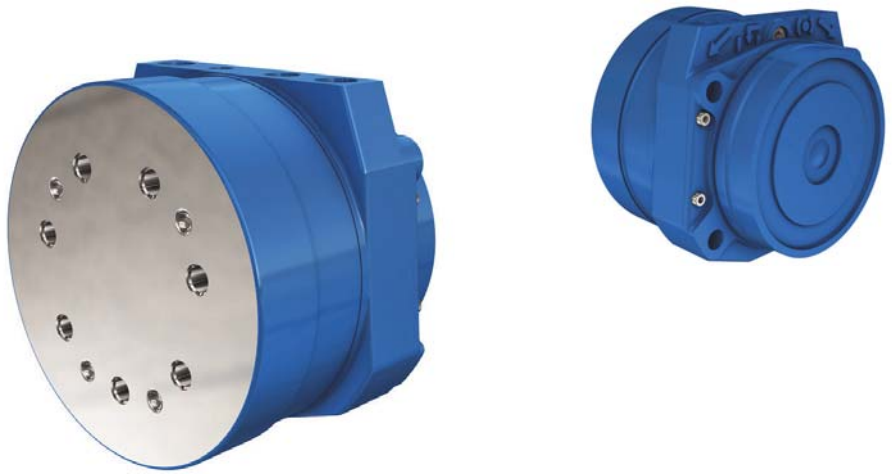

TECHNICAL CATALOG

POCLAIN Hydraulics

Methodology :
This document is intended for manufacturers of machines that incorporate Poclain Hydraulics products. It describes the technical characteristics of Poclain Hydraulics products and specifies installation conditions that will ensure optimum operation.
This document includes important comments concerning safety. They are indicated in the following way:

	Safety comment.

This document also includes essential operating instructions for the product and general information. These are indicated in the following way:

	Essential instructions.
	General information .
	Information on the model number.Information on the model code.
	Weight of component without oil.
	Volume of oil.
	Units.
	Tightening torque.
	Screws.
	Information intended for Poclain-Hydraulics personnel.

The views in this document are created using metric standards.
The dimensional data is given in mm and in inches (inches are between brackets and italic)

CONTENT

MODEL CODE

	C	D		F			P				S					
	1	1	2	3	1	2	3	1	2	3	4	1	2	3	4	5	6
M K 0 5		1	2					1	3	4	0						

❶

	cm³/tr *[cu.in/rev.]*
5	272 *[16,6]*
8	447 *[27,3]*
0	558 *[34,0]*
2	670 *[40,9]*

0	Without options or adaptations
2	T4 speed sensor installed
8	Predisposition for speed sensor
A	Hollow shaft
S	TR speed sensor installed
Q	TD speed sensor installed

1-Displacement	**1**
Without fixation	**2**
ISO 9974-1 connections	**4**
ISO 11926-1 connections	**A**
Manifold interface	**C**
Axial brake port	**E**

4	M threaded holes
3	Short support
1	Without bearing

Axial brake port	Without brake	A 0 5
	Immobilisator	K 0 5
Radial brake port	Multidisc brakes	F 0 4
		F 0 7
	Multidisc reinforced brake	T 0 4

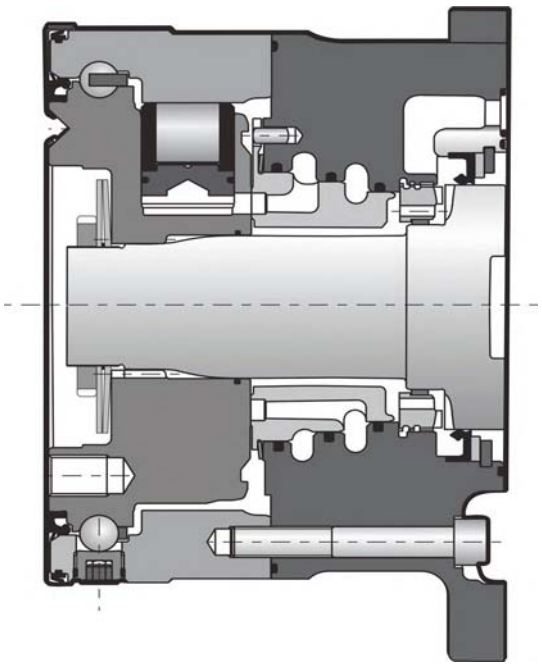

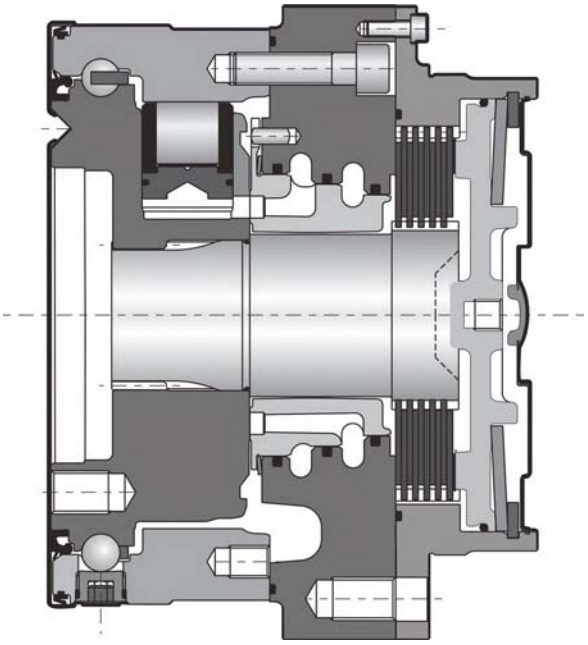

Motor Inertia **0.1 kg.m²**

C	❶ cm³/tr *[cu.in/rev.]*	Theoretical torque ❶ at 100 bar Nm	at 1000 PSI *[lb.ft]*	Max.power ❶ kW *[HP]*	Max. speed ❶ tr/min*[RPM]*	Max. pressure ❶ bar *[PSI]*
5	272 *[16,6]*	432	*[220]*	22,5 *[30]*	130	400 *[5 800]*
8	447 *[27,3]*	711	*[361]*		80	
0	558 *[34,0]*	887	*[451]*		65	
2	670 *[40,9]*	1 065	*[542]*		55	

❶ **First displacement**

CHARACTERISTICS

	C	D	F	P	S
	1	1 2 3	1 2 3	1 2 3 4	1 2 3 4 5 6
M K 0 5					

Dimensions for standard 1-displacement motor

	35 kg *[77 lb]*	35 kg *[77 lb]*
	1,00 L *[60 cu.in]*	1,00 L *[60 cu.in]*
	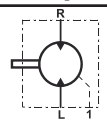	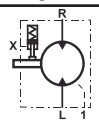

D

1	2	3
1	2	E

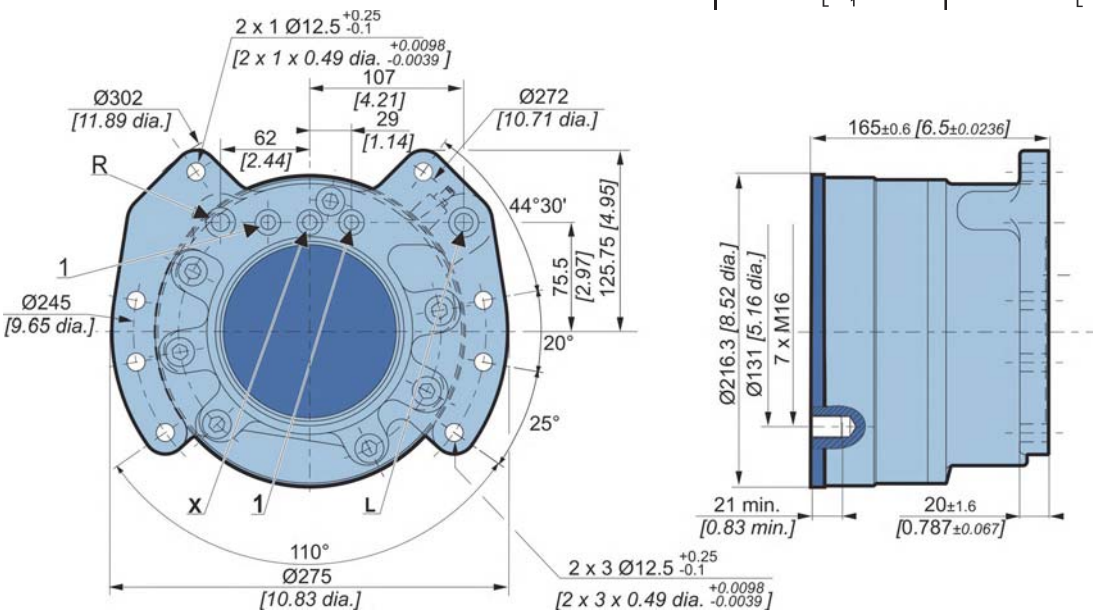

Collar retaining screw

	Classe	N.m	*[lb.ft]*
4 x M10 x 1.5	10,9	69	*[51]*

(*) The tightening torques are given for the indicated loads.

Dimensions for standard 1-displacement motor

	32 kg [70 lb]	40 kg [88 lb]
	1,00 L [60 cu.in]	1,00 L [60 cu.in]

D

1	2	3
1	2	

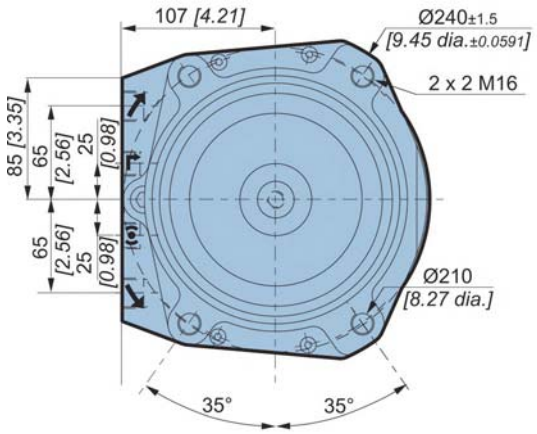

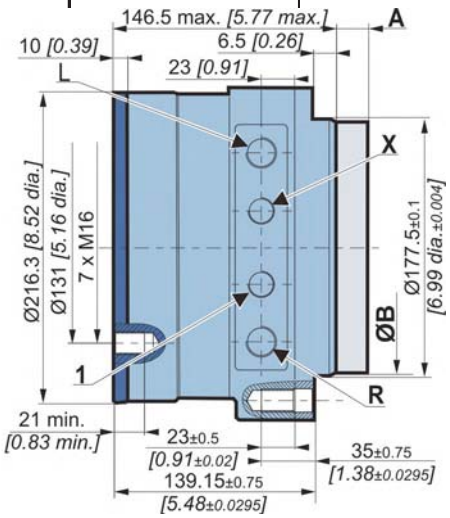

Dimensions for standard 1-displacement motor

	32 kg [70 lb]	40 kg [88 lb]
	1,00 L [60 cu.in]	1,00 L [60 cu.in]

D

1	2	3
1	2	C

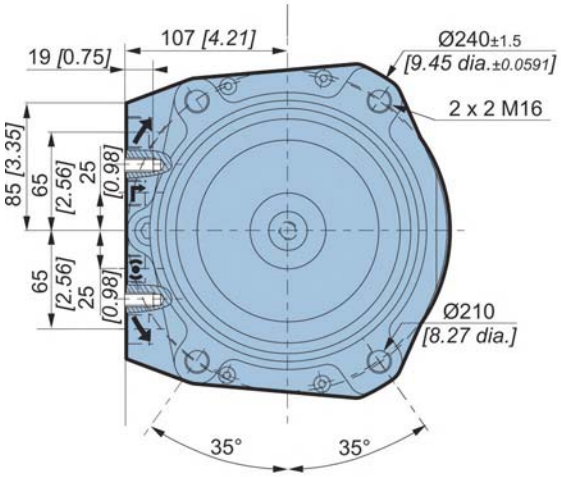

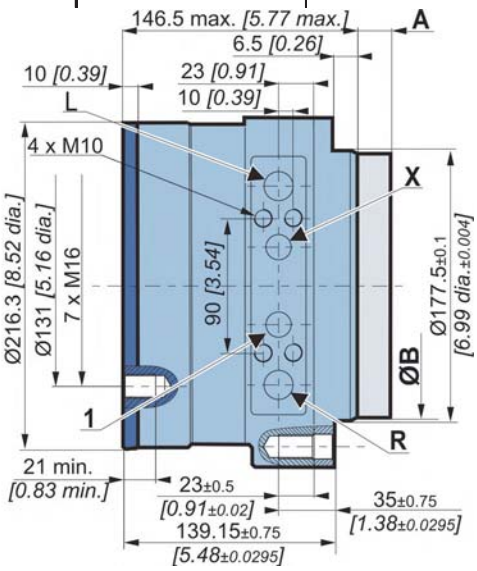

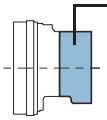

C	F04	F07	T04
A	38,6 [1,52]	57 [2,24]	42,5 [1,67]
Ø B	177,5 [6,99]	177,5 [6,99]	177,5 [6,99]

Also see 'Brakes' section.

Collar retaining screw

	Classe	N.m	*[lb.ft]*
7 x M16 x 2	10,9	295	*[218]*

(*) The tightening torques are given for the indicated loads.

Load curves

Permissible radial loads

Max. permissible loads: 0 tr/min *[0 RPM]*; 0 bar *[0 PSI]*

Continuous permissible loads:
> 0 tr/min *[> 0 RPM]*; 275 bar *[3 988 PSI]*.

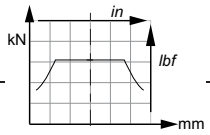

Service life of bearings

Test conditions :

L : Millions B10 revolutions at 150 bars (average pressure), with 25 cSt fluid, code 0 displacement, without axial load.

1	3	4	0
1	2	3	4
P			

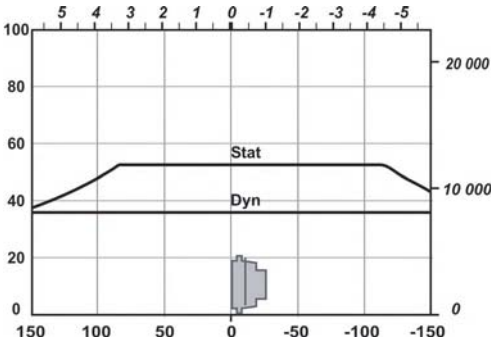

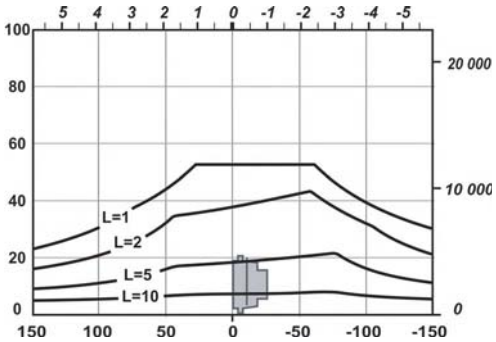

The service life of the components is influenced by the pressure.You must check that the combination of forces applied (Axial load / Radial load) is compatible with the permissible loads for the components, and that the resulting service lives of these components complies with the application's specifications. For an accurate calculation, consult your Poclain Hydraulics application engineer.

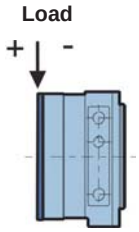

Efficiency

Overall efficiency

Average values given for guidance for code 0 displacement after 100 hours of operation with HV46 hydraulic fluid at 50°C *[122°F]*.

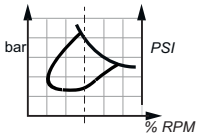

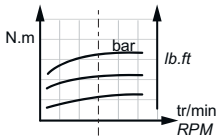

Actual output torque

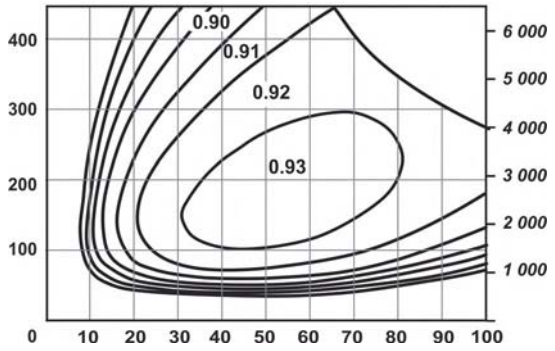

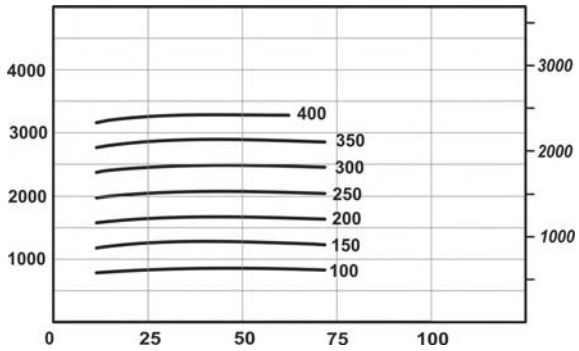

For a precise calculation, consult your Poclain Hydraulics application engineer.

Chassis mounting

	C	D	F	P	S
	1	1 2 3	1 2 3	1 2 3 4	1 2 3 4 5 6
M K 0 5					

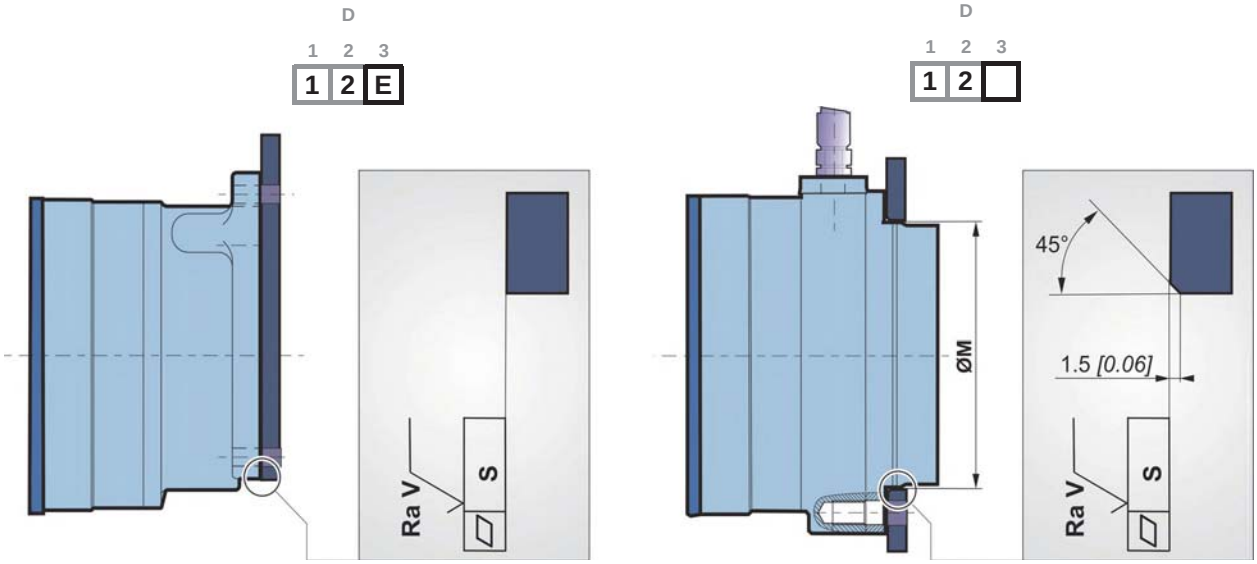

	ØM mm *[in]*	S mm *[in]*	Ra V µm *[µin]*		Class of screw	N.m *[lb.ft]*
E	- -	0,1 *[0,004]*	2,5 *[0,10]*	8 x M12 x 1.75	10,9	120 *[89]*
	177,5 *[6,99] (1)*	0,2 *[0,01]*	12,5 *[0,49]*	2 x 2 x M16 x 2	10,9	295 *[218]*

(1) + 0.3 *[+0.0118]*
+ 0.2 *[-0.0078]*

Installation constraints

	C	D	F	P	S
	1	1 2 3	1 2 3	1 2 3 4	1 2 3 4 5 6
M K 0 5		1 2 E	K 0 5		

Sealing chamber A between the brake and the face of the motor mounting must be connected to the drain-line (1), to avoid possible disturbance to the smooth running of the motor.
This does not concern hollow-shaft motors.

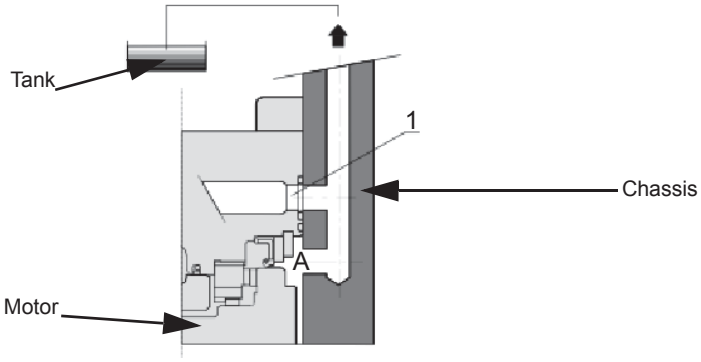

Hydraulic connections

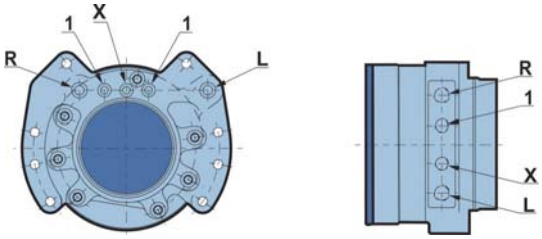

M	K	0	5																				
				1	1	2		1	2	3	1	2	3	4	1	2	3	4	5	6
				C	D			F			P				S					

		Old standards	Standards	Power supply R,L	Drainage 1	Control of brake X
A		SAEJ514	ISO 11 926-1	7/8" - 14 UNF	3/4" - 16 UNF	9/16" - 18 UNF
4		DIN 3 852 NFE 48 050	ISO 9 974-1	M22 x 1.5	M18 x 1.5	M16 x 1.5
C	mm			14	10	10
	[in]			*[0,55]*	*[0,39]*	*[0,39]*
E	mm			12,5	12,5	12,5
	[in]			*[0,49]*	*[0,49]*	*[0,49]*

To find the connections' tightening torques, see the brochure "Installation guide" N° 801478197L.

You are strongly advised to use the fluids specified in brochure "Installation guide" N° 801478197L.

Brakes

	C	D	F	P	S
	1	1 2 3	1 2 3	1 2 3 4	1 2 3 4 5 6
M K 0 5		E			

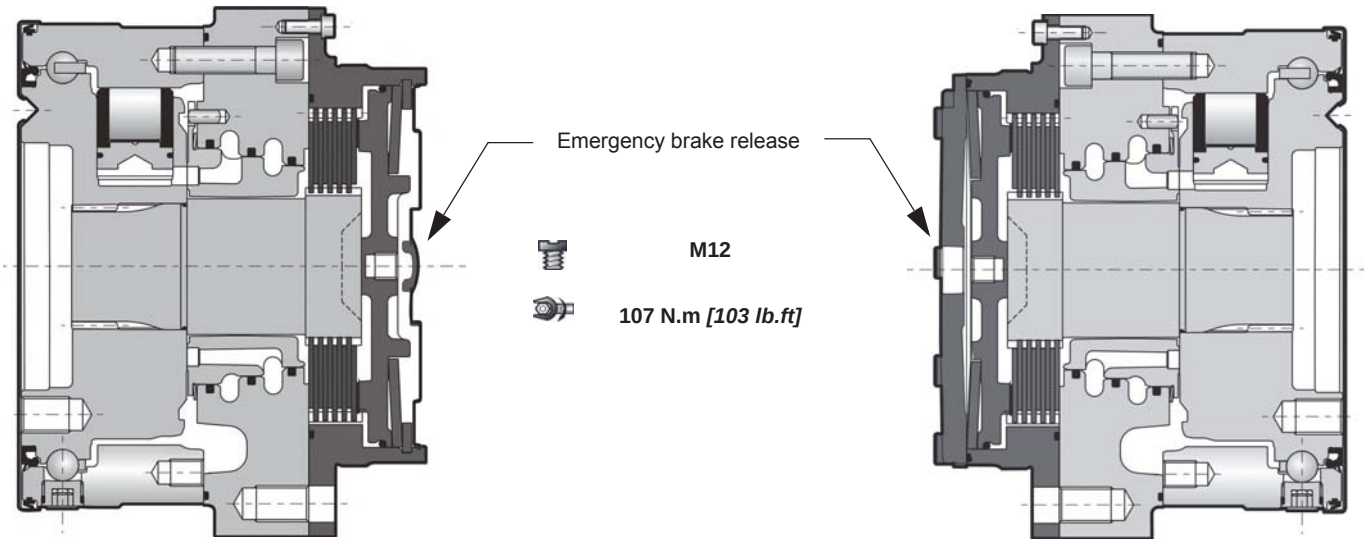

Brake principle

This is a multidisc brake which is activated by a lack of pressure. The spring exerts a force on the piston, which presses on the fixed and mobile discs, and immobilizes the shaft. The braking torque decreases in linear proportion to the brake release pressure.

C	F04		F07		T04	
Parking brake torque with 0 bars in the housing (new brake)	3 500 N.m	*[2 580 lb.ft]*	7 000 N.m	*[5 160 lb.ft]*	3 600 N.m	*[2 660 lb.ft]*
Emergency dynamic braking torque with 0 bars in the housing (gives a maximum of 10 emergency braking operations)	2 275 N.m	*[1 680 lb.ft]*	4 600 N.m	*[3 390 lb.ft]*	2 340 N.m	*[1 730 lb.ft]*
Residual parking torque at 0 bars in the housing*	2 625 N.m	*[1 940 lb.ft]*	5 250 N.m	*[3 870 lb.ft]*	2 700 N.m	*[1 990 lb.ft]*
Minimum brake release pressure	14 bar	*[203,1 PSI]*	18 bar	*[261,1 PSI]*	16,5 bar	*[239,3 PSI]*
Maximum brake release pressure	30 bar	*[435,1 PSI]*	30 bar	*[435,1 PSI]*	30 bar	*[435,1 PSI]*
Capacity	0 cm³	*[0,0 cu.in]*	0 cm³	*[0,0 cu.in]*	0 cm³	*[0,0 cu.in]*
Brake release capacity	15 cm³	*[0,9 cu.in]*	24 cm³	*[1,5 cu.in]*	16,5 cm³	*[1,0 cu.in]*

* After being used as emergency brake

Do not run-in the multidisc brakes.

Immobilisator

	C	D	F	P	S
	1	1 2 3	1 2 3	1 2 3 4	1 2 3 4 5 6
M K 0 5			K 0 5		

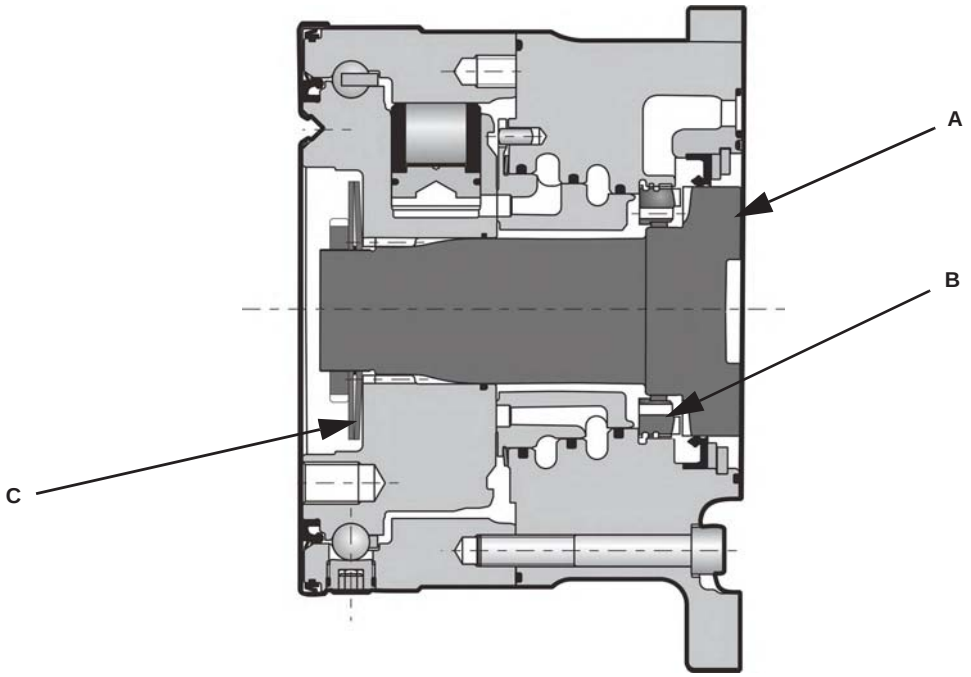

Brake principle
When stationary, with no pressure, springs move toothed shaft (A) to mesh with the teeth of crown (B) mounted in the valve cover, to immobilise the motor

Parking brake torque with 0 bars in the housing (new brake)	3 500 Nm *[2 581 lb.ft]*
Minimum brake release pressure	12 bar *[174,0 PSI]*
Maximum brake release pressure	30 bar *[435,1 PSI]*
Capacity	0 cm³ *[0,0 cu.in]*
Brake release capacity	15 cm³ *[0,9 cu.in]*

OPTIONS

	C	D	F	P	S
	1	1 2 3	1 2 3	1 2 3 4	1 2 3 4 5 6
M K 0 5					

You can accumulate more than one optional part. Consult your Poclain Hydraulics sales engineer.

2 - S - Q - 8 - Installed speed sensor or predisposition

Designation	C
T4 Speed sensor (without rotation direction)	2
TR Speed sensor (digital rotation direction)	S
TD Speed sensor (two phase shifted frequencies)	Q
Predisposition for Speed sensor	8

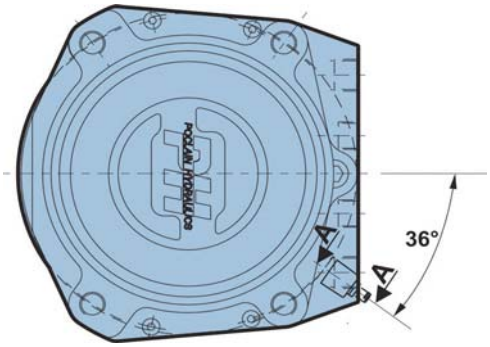

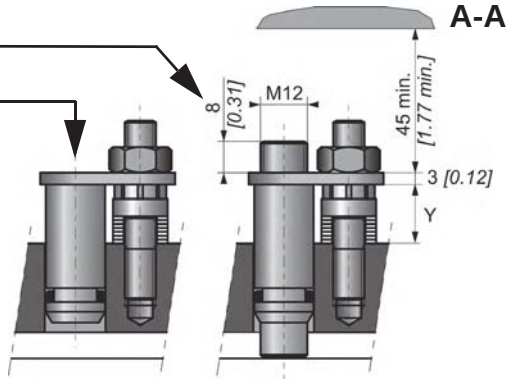

Max. length Y= 15.9

Standard number of pulses per revolution= 49

Look at the "Mobile Electronic" N° A01889D technical catalogue for the sensor specifications and its connection.

To install the sensor, see the "Installation guide" brochure No. 801478197L.

A - Hollow shaft

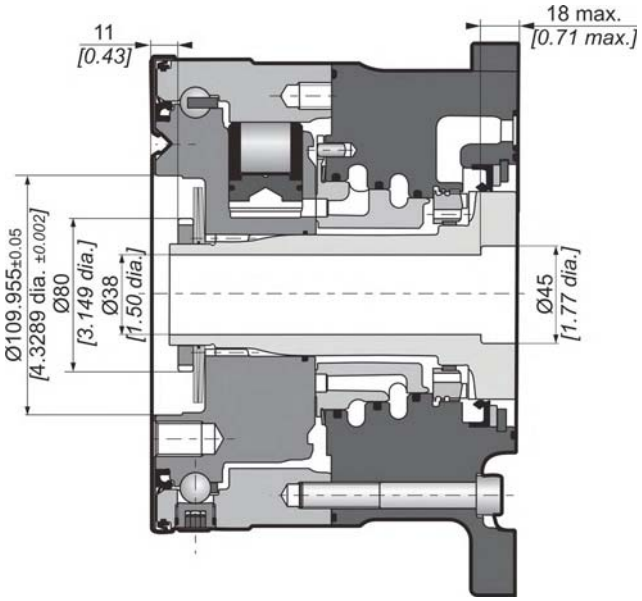

The hollow shaft option is only available with the axial-supply version.

POCLAIN Hydraulics

10/01/2018
801 578 136Q
801 578 147C
801 578 158P
801 578 169B
801 578 180N
A09217T

www.poclain-hydraulics.com